AVK CERTUS PE100 BALL VALVES

85/30
002
HDPE/BV

Fusible ends / SDR11 / GAS MOP10 - WATER PN16 / Full bore[1]
Valve sizes OD20 up to OD180

The AVK CERTUS universal ball valve is for use in the isolation of water & gas on domestic, commercial and industrial premises. The ends are designed for butt-/electro-fusion making the valve an integral part of the fully welded leak-free pipe system.
The valve is designed, manufactured and approved to worldwide leading standards.

Features

- Seat, ball and grease combination ensuring low operating torques and avoids sticking over time
- Grease with minimal wearing off from the lubricated surfaces for improved long term performance
- Easy mounting of all standardised spindles due to internal and external drive
- Overtorque protection and replaceable top cap under live conditions
- Available with double spigot length allowing for 2 electrofusion joints
- Traccoding (barcode) + AVIT (QR code) - asset management to record, track and identify where valves are located and ensure traceability at all times
- Seat compression accurately set during automated welding process

Tests/Approvals

EN1555-4, ISO4437-4, GIS/V7-2 and EN12201-4

Accessories/Options

- Support base (up to OD90)

[1] Sizes with full bore (ID = >80%): OD40, OD125, OD180
Sizes with clearway bore (ID = 100%): OD20, OD32, OD63, OD90, OD110, OD160

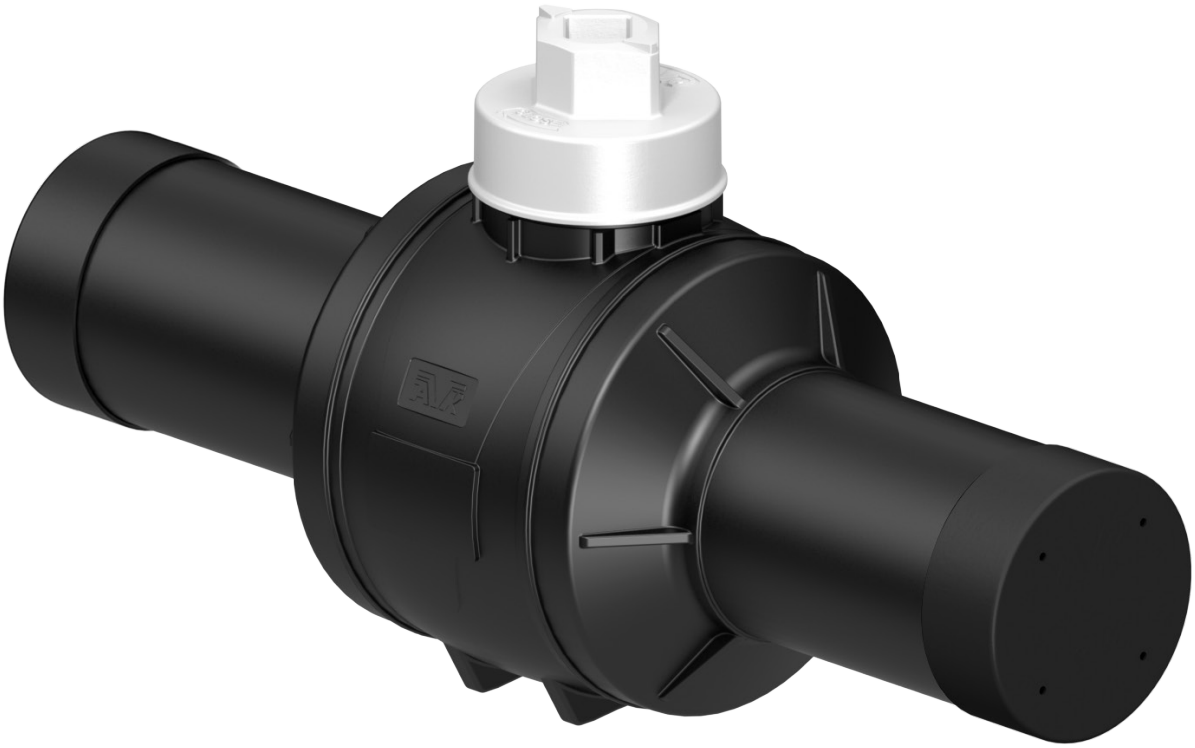

Expect… AVK

© AVK GROUP A/S 2019

AVK CERTUS PE100 BALL VALVES

85/30
002
HDPE/BV

Fusible ends / SDR11 / GAS MOP10 - WATER PN16 / Full bore*
Valve sizes OD20 up to OD180

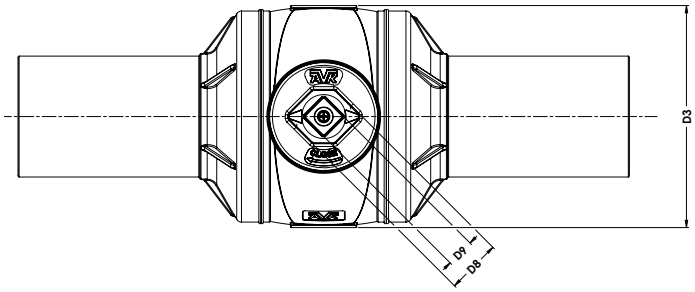

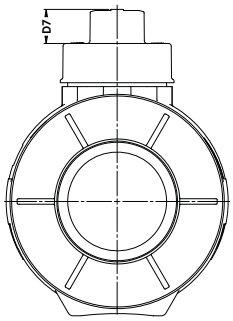

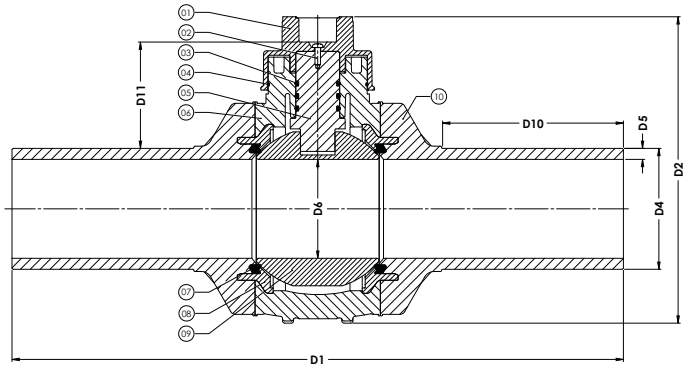

OD110 - OD180

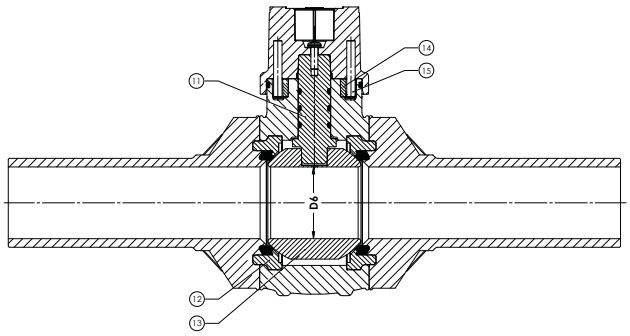

OD20 - OD90

Component list

1. Topcap	PP-GF	9. Ball	POM
2. Screw	A4	10. Spigot	PE100
3. O-ring	NBR-70	11. Stem	PA
4. O-ring	NBR-70	12. Seat retainer	PP
5. Stem	POM	13. Ball	PP[3]
6. Body	PE100	14. Reinforcement ring	PA-GF
7. Ball seat	NBR-70	15. Cylindrical pin	A4
8. Seat retainer	PE100[2]		

[2] PP for sizes OD110 and OD125
[3] POM ball available on request

Reference nos. and dimensions

AVK ref. nos.	Valve size mm	D1 mm	D2 mm	D3 mm	D4 mm	D5 mm	D6 mm	D7 mm	D8 mm	D9 mm	D10 mm	D11 mm	Weight kg
85-020-30	OD20/DN25	305	155	95	20	3.0	26	46	49.6 x 49.6	20 x 20	82	76	0.8
85-032-30	OD32/DN25	320	155	95	32	3.0	26	46	49.6 x 49.6	20 x 20	88	70	0.8
85-040-30	OD40/DN25	340	155	95	40	3.7	26	46	49.6 x 49.6	20 x 20	98	66	0.9
85-063-30	OD63/DN50	435	205	135	63	5.8	51	46	49.6 x 49.6	20 x 20	130	84	1.8
85-090-30	OD90/DN80	520	285	180	90	8.2	74	46	49.6 x 49.6	20 x 20	158	123	3.8
85-110-30	OD110/DN100	560	280	205	110	10.0	90	31	49.6 x 49.6	20 x 20	164	96	5.5
85-125-30	OD125/DN100	585	280	205	125	11.4	90	31	49.6 x 49.6	20 x 20	182	89	5.9
85-160-30	OD160/DN150	700	370	280	160	14.6	131	35	49.6 x 49.6	20 x 20	196	120	13.8
85-180-30	OD180/DN150	735	370	280	180	16.4	131	35	49.6 x 49.6	20 x 20	220	110	14.4

The designs, materials and specifications shown are subject to change without notice due to the continuous development of our product programme.